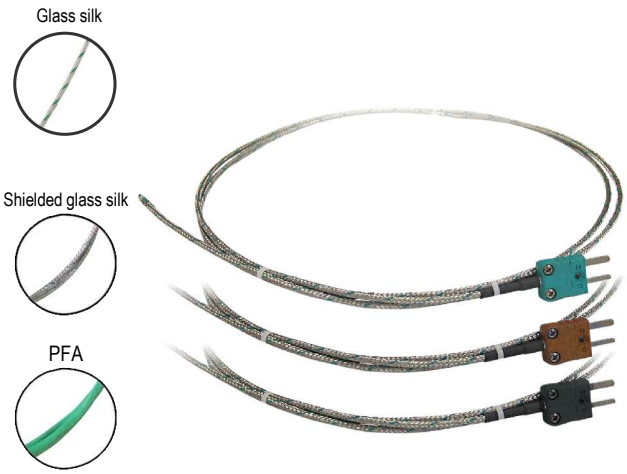

CE

*Thermocouple probe with **cable** and **visible welding***

FT / FJ / FK

- Thermocouple types T, J, K or N.
- Thermocouple with short reponse time.
- Measuring range **from -40°C to +400°C**.
- Singlepair mounting with choice of cable.

Part number

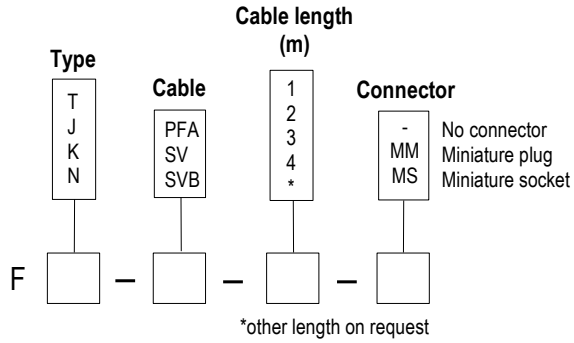

Example : FT-PFA-2-MM
Model : Thermocouple type T with glass silk cable, 2m long and with a miniature plug output.

Probe dimensions

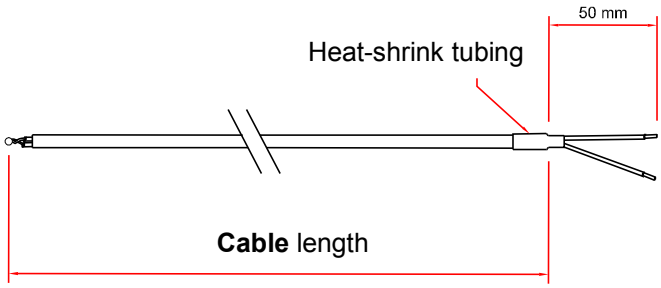

Technical feature

Operating temperature.....PFA cable : from -40°C to +250°C
(TCK / TCJ / TCT / TCN)
Glass silk cabe : from -40°C to +400°C
*(For **TCT** : from -40°C to +350°C)*

Accuracy for class 1.....See "Tolerances" table

Storage temperature.....from -20°C to +80°C

Class 1 thermocouple.....PFA cable : Teflon®
SV cable : Glass silk
SVB cable : Shielded glass silk

Ouput .....stripped wire, miniature plug or standard on request.

Tolerances

TC	Measuring range CLASS 1	TOLERANCE
T	From -40°C to +350°C	From -40°C to +125°C ± 0.5°C From 125°C to +350°C ± 0.004 x T°
J	From -40°C to +750°C	From -40°C to +375°C ± 1.5°C From 375°C to 750°C ± 0.004 x T°
K	From -40°C to +1000°C	From -40°C to +375°C ± 1.5°C From 375°C to 1000°C ± 0.004 x T°
N	From -40°C to +1000°C	From -40°C to +375°C ± 1.5°C From 375°C to 1000°C ± 0.004 x T°

Most common thermocouple types

THERMOCOUPLE TYPES	+ CONDUCTOR	- CONDUCTOR	COLOR OF COMPENSATING CABLE
K	Chromel	Alumel	Ext. color + = GREEN, - = WHITE
T	Copper	Constantan	Ext. color + = BROWN, - = WHITE
J	Iron	Constantan	Ext. color + = BLACK, - = WHITE
N	Nicrosil	Nisil	Ext. color + = PINK, - = WHITE
R	Platinum-13% Rhodium	Platinum	Ext. color + = ORANGE, - = WHITE
S	Platinum-10% Rhodium	Platinum	Ext. color + = ORANGE, - = WHITE
B	Platinum-30%Rhodium	Platinum- 6%Rhodium	Ext. color + = GREY, - = WHITE

Accessories (See Datasheet)

- Extension cable
- Compensating cable
- Standard or miniature connector
- Cable seal for plug and socket connector
- Miniature or standard fixed connector
- Miniature or standard connectors panel
- Extension lead
- Converters

Ref. FTang – FT - FJ – FK - 05/07 A – We reserve the right to modify the characteristics of our products without notice.

Händlerkontakt:

MDUA GmbH & Co. KG · Mess- und Datentechnik für Umweltschutz und Arbeitssicherheit
Otto-Hahn-Str. 43 · 48161 Münster · Tel.: 02534 / 9775806 · Fax: 02534 / 9775807 · mail@mdua.de · www.mdua.de