CE

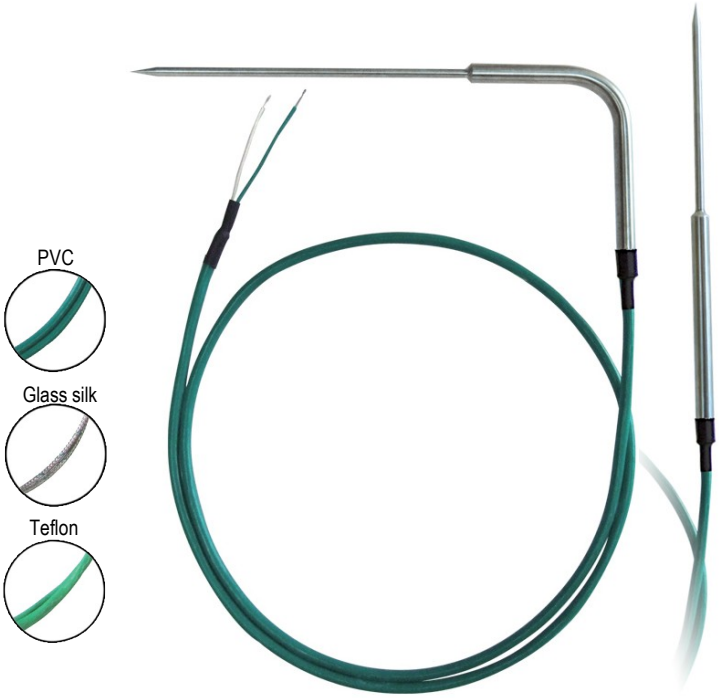

Thermocouple temperature probe with handle to prick

SFPP K / SFPPC K
SFPPD K / SFPPCD K

Probe features

- Pricking temperature probe mounted on straight or angled handle
- Thermocouple types T, J, K and N.
- Measuring range **from -40°C to +550°C**

Straight handle

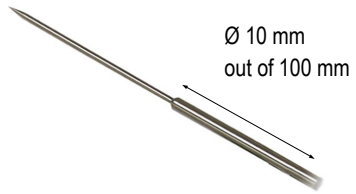

Angled handle

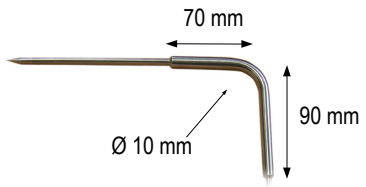

Technical features

Working temperature.....from -40°C to +105°C for shielded PVC output
from -40°C to +260°C for TB output
from -40°C to +400°C for SVB output
from -40°C to +550°C for SVB (Tc K only) output

Accuracy for 1.....See "Tolerances"

Mounting of welding.....Insulated hot welding

Storage temperature.....from -20°C to +80°C

Output .....stripped wires, miniature male connector or standard on request.

Mounting of cable output.....Output on cable or with stainless steel flexible 7 mmØ .
Water-resistant flexible on request as option.
Curve spring as option (unless stainless steel flexible output)

Contact tip.....4.5 or 6 mm Ø in 316 L stainless steel
Tapered tip
Handle : **Straight** 10 mm Ø and 100 mm length
Angled at 90° and 90 mm length
Other on request.

Water-resistant as option for use in wet or submerged places.

SFPPK & SFPPKD

Pricking cable probe with handle

- **Probe with straight handle on cable**

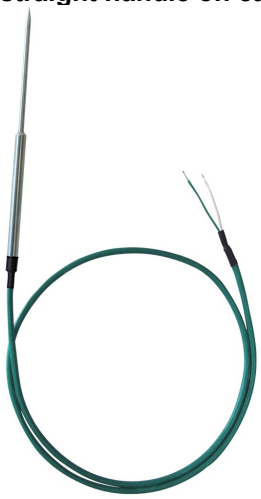

- **Probe with straight handle on flexible**

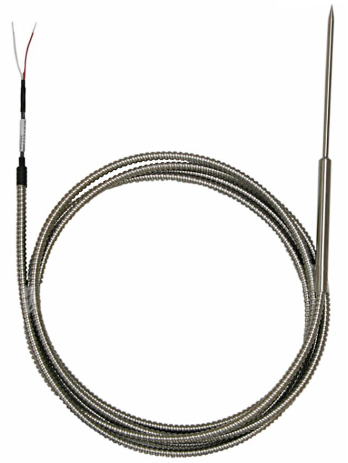

Dimensions

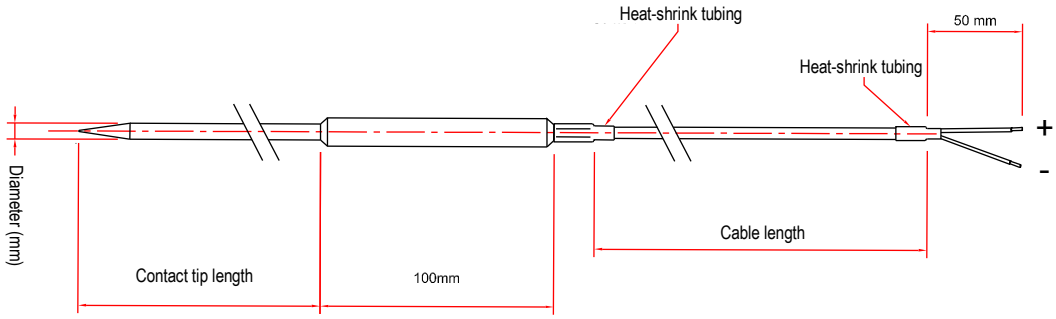

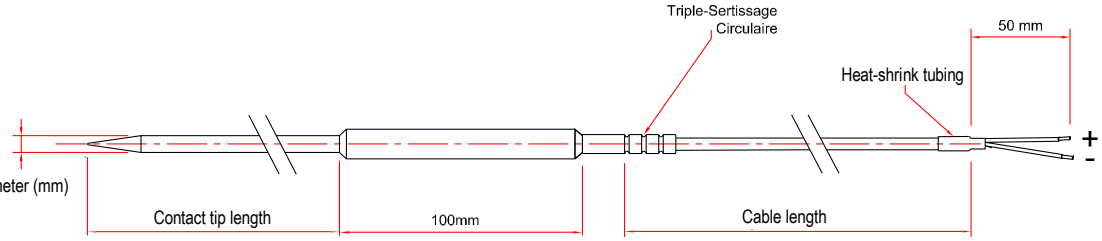

Optional : water-resistant

Part numbers

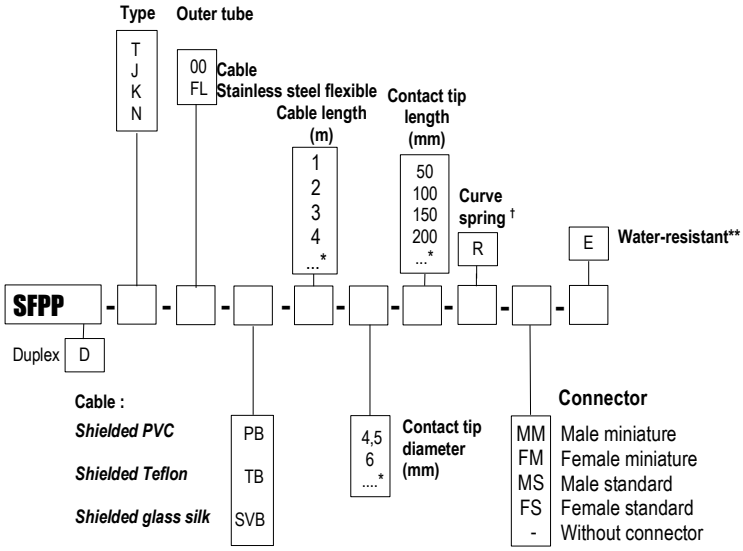

Example : SFPPK-00-TB-1-45-100-MM
Model : Thermocouple type K temperature probe, Outer tube in shielded Teflon cable of 1 m length. Stainless steel contact tip 4,5 mm Ø, to prick with straight handle of 100 mm length, without curve spring. **Measuring range from -40 to +105°C.**

* Other dimension on request
† No curve spring on flexible output FL
** E for submerged use according to use rules

SFPPCK & SFPPCKD

Pricking cable probe with angled handle

- **Probe with angles handle on cable**

- **Probe with angled handle on flexible**

Dimensions

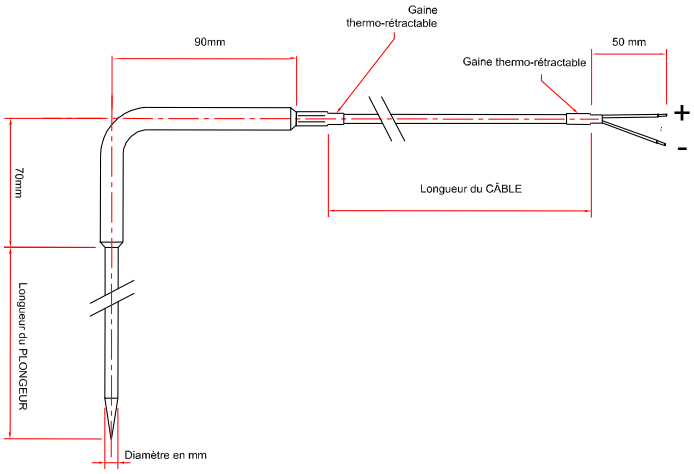

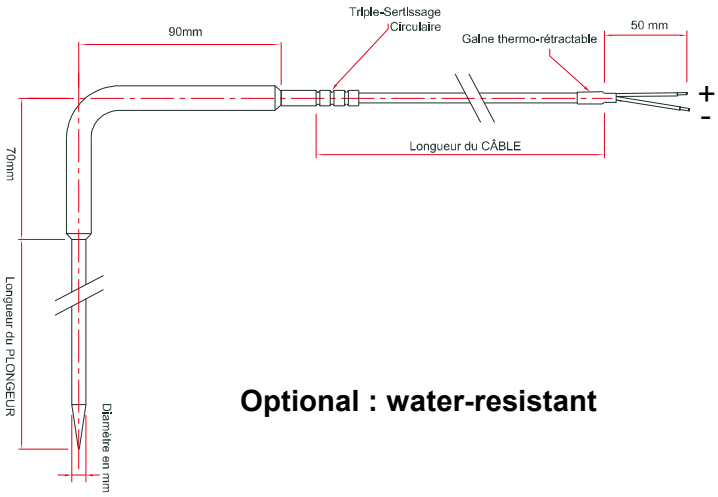

Optional : water-resistant

Part numbers

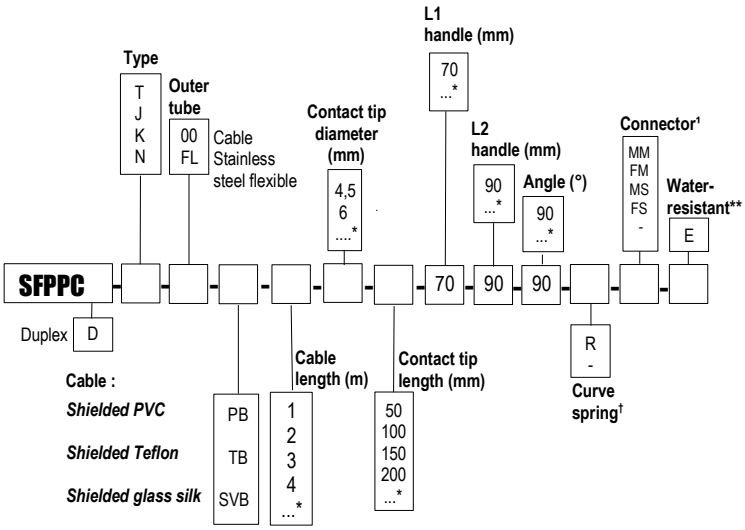

Example : SFPPCK-00-TB-1-45-100-70-90-90-R-MM
Model : Thermocouple type K temperature probe, outer tube in shielded Teflon cable of 1 m length with male miniature connector. Stainless steel contact tip 4,5 mm Ø and 100 mm length to prick with angled handle of L1 length 70mm and L2 length 90 mm, angle of the handle at 90°, with curve spring.
Measuring range from -40 to +105°C.

* Other dimension on request
† No curve spring on flexible output FL
** E for submerged use according to use rules

¹ MM: Male miniature
FM: Female miniature
MS: Male standard
FS: Female standard
-: Without connector

Tolerances of the probe

TC	MEASURING RANGE CLASS 1	TOLERANCE
T	From -40°C to +350°C	From -40°C to +125°C ± 0.5°C From 125°C to +350°C ± 0.004 x T°abs
J	From -40°C to +750°C	From -40°C to +375°C ± 1.5°C From 375°C to 750°C ± 0.004 x T° abs
K	From -40°C to +1000°C	From -40°C to +375°C ± 1.5°C From 375°C to 1000°C ± 0.004 x T°abs
N	From -40°C to +1000°C	From -40°C to +375°C ± 1.5°C From 375°C to 1000°C ± 0.004 x T°abs

Most common thermocouple types

THERMOCOUPLE TYPE	+ CONDUCTOR	- CONDUCTOR	COLOR OF COMPENSATING CABLE
K	Nickel-Chrome 10%	Nickel-Aluminium 5% -Silicium	Ext. color + = GREEN, - = WHITE
T	Copper	Copper-Nickel	Ext. color + = BROWN, - = WHITE
J	Iron	Copper-Nickel	Ext. color + = BLACK, - = WHITE
N	Nickel 84,4% Chromium 14,2% Silicium 1,4%	Nickel 95,6% Silicium 4,4%	Ext. color + = PINK, - = WHITE
R	Platinum-Rhodium 13%	Platinum	Ext. color + = ORANGE, - = WHITE
S	Platinum-Rhodium 10%	Platinum	Ext. color + = ORANGE, - = WHITE
B	Platinum-Rhodium 30%	Platinum-Rhodium 6%	Ext. color + = GREY, - = WHITE

Accessories (See data sheet)

- Extension cable
- Compensating cable
- Standard or miniature connector
- Cable seal for plug and socket connector
- Miniature or standard connectors panel
- Miniature or standard connectors panel
- Extension lead
- Converters

Ref. FTang – SFPPK – SFPPCK - 12/08 C – RCS (24) Périgueux B349 282 095 Non-contractual document – We reserve the right to modify characteristics of our products without prior notice.

Händlerkontakt:

MDUA GmbH & Co. KG · Mess- und Datentechnik für Umweltschutz und Arbeitssicherheit
Otto-Hahn-Str. 43 · 48161 Münster · Tel.: 02534 / 9775806 · Fax: 02534 / 9775807 · mail@mdua.de · www.mdua.de